454 Conversion
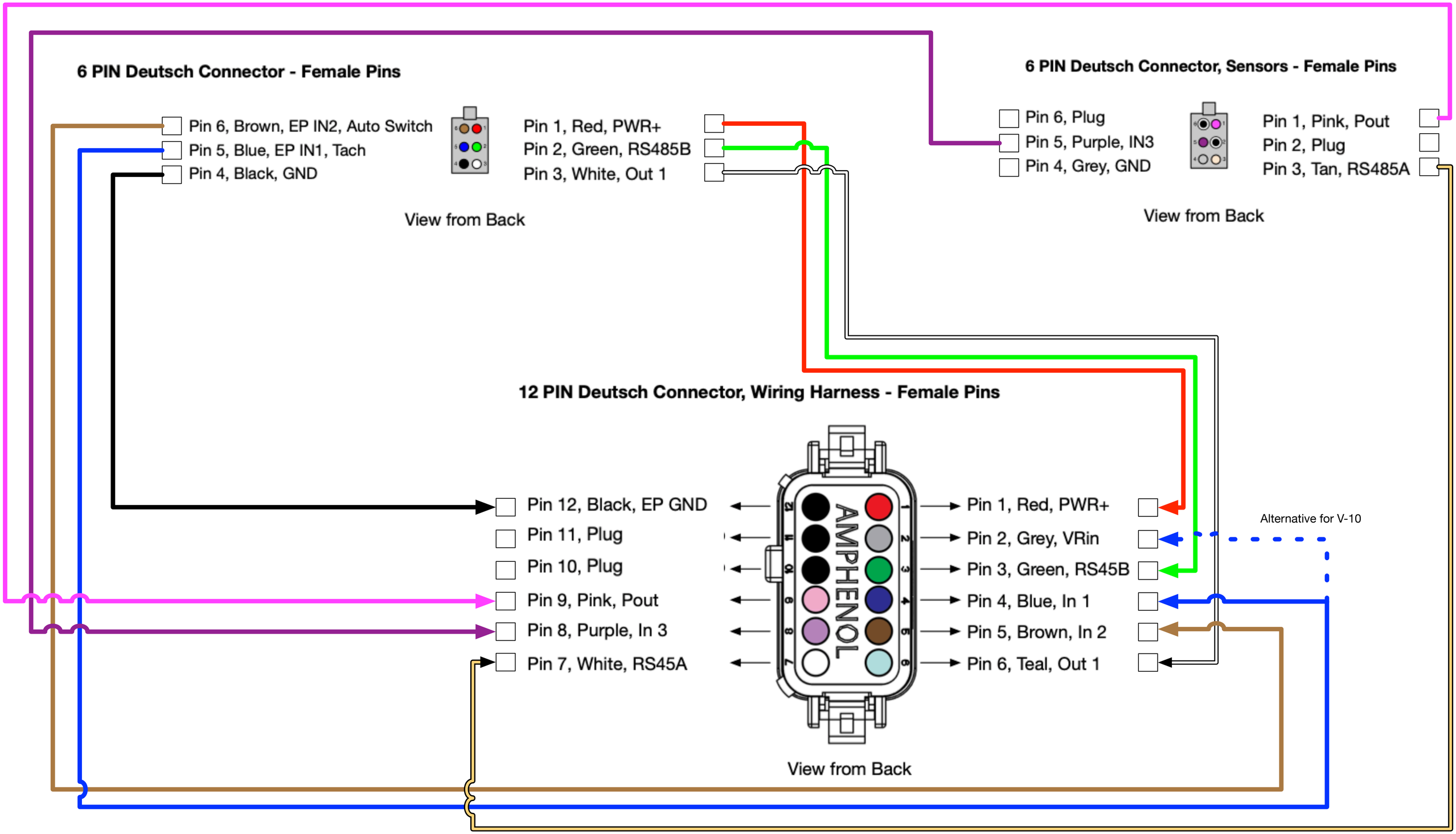
For a V-10, the blue wire for Tach will need to
be moved to Pin 2 VRin instead of Pin 4 IN 1
See dotted blue line